Steel and Metal
Bandsaw Machines
Mössner REKORD

www.moessner-kg.de

Analysieren. Entwickeln. Machen.

mössner

MÖSSNER BANDSAW MACHINES

100 YEARS EXPERIENCE IN CUTTING

For good reason Mössner Bandsaw Machines are used in all sectors of industry, mainly in the metal processing industry, for a wide range of cutting solutions.

Stable and low-vibration machine bodies, a powerful and at the same time efficient drive, solid mechanics, electronics and workmanship are characteristic features of all Mössner Bandsaw Machines. Thereby our machines guarantee a smooth run and thus long service life and durability.

Mössner REKORD standard machines are exclusively designed and manufactured in our plant in Eschach representing quality “made in Germany”.

Our bandsaw machines are constructed for universal use, providing flexibility due to a large range of accessories and special equipment so that the machine can be specifically equipped for your requirements.

Do you need to cut special dimensions, workpieces or materials?
Our testing department is at your disposal to cut your workpieces.

Our objective is to design our bandsaw machine as efficient as possible by means of tools and special equipment to find an optimum solution for your specific needs.

Our team is ready to give advice on your particular demands – just call us!

YOUR CONTACT AT MÖSSNER

August Mössner GmbH + Co. KG
Hohenstaufenstraße 3
73569 Eschach - Germany

Phone +49 (0)7175 99806-0
Fax +49 (0)7175 99806-41
Website: www.moessner-kg.de

Sales Department Standard Bandsaw Machines	Mrs. Ingrid Quintin Phone no.: +49 (0)7175 99806-72 Email: IngridQuintin@moessner-kg.de
Sales Department Special-purpose Machines	Mrs. Brigitte Hartmann Sales Manager Phone no.: +49 (0)7175 99806-17 Email: BrigitteHartmann@moessner-kg.de
	Mr. Philipp Staudenecker Phone no.: +49 (0)7175 99806-69 Email: PhilippStaudenecker@moessner-kg.de
	Mr. Marco Winkler Phone no.: +49 (0)7175 99806-21 Email: MarcoWinkler@moessner-kg.de
	Mr. Michael Munz Phone no.: +49 (0)7175 99806-11 Email: MichaelMunz@moessner-kg.de
Internal Sales Department	Mrs. Christina Necker Phone no.: +49 (0)7175 99806-12 Email: ChristinaNecker@moessner-kg.de
Spare Parts Sales	Mrs. Sonja Vix Phone no.: +49 (0)7175 99806-30 Email: SonjaVix@moessner-kg.de
	Mrs. Simone Markowetz (Export) Phone no.: +49 (0)7175 99806-43 Email: SimoneMarkowetz@moessner-kg.de
	Mrs. Susanne Schmid (Export) Phone no.: +49 (0)7175 99806-77 Email: SusanneSchmid@moessner-kg.de
	Mrs. Simone Hieber Phone no.: +49 (0)7175 99806-39 Email: SimoneHieber@moessner-kg.de

OUR PARTNERS

China

Beijing RHX Technology Development Co. Ltd.
Room 103, NO.215, Anshun Street, Tongzhou District
Beijing 101100, China
Phone +86-10-51349892, Fax +86-10-51349893
yuyanqi@rhx.com.cn, www.rhx.com.cn

USA

Reich Companies
PO BOX 218-4850, Commerce Drive
35173Trussville Alabama, USA
Phone 001.205.655.2121, Fax 001.205.655.2123
email@reichcompanies.com, www.reichcompanies.com

Switzerland

Springmann Neuchâtel
Route des Falaises 110,
2008 Neuchâtel, Switzerland
Phone +41 32 729 1122,
Fax +41 32 725 0101
neuchatel@springmann.ch

Springmann Niederbüren
Staatsstraße 10,
9246 Niederbüren Switzerland
Phone +41 71 424 2600,
Fax +41 71 424 2660
niederburen@springmann.ch

http://www.springmann.com/f/homepage.php

Netherlands

Van Hoorn Machining
De Run 4338, **5503 LN Veldhoven, Netherlands**
Phone: +31 40-2540907, Fax: +31 40-2546788
info@vanhoornmachining.com, www.vanhoornmachining.com

Sweden

AB Systemverktyg
Johan Skyttes väg 201, **125 34 Älvsjö, Sweden**
Phone +46-8999200, Fax +46-87492815
http://www.systemverktyg.se/

Spain

Hossl, Hermann Otto Suderow, S.L
Las Mercedes 31, 1º, dpto. 10, Edificio Abra 3
48930 Las Arenas, Vizcaya, Spain
Tel. +34 94 480 00 18, Fax +34 94 431 61 35
info@hossl.com, www.hossl.com

Mexico

Kontrolable S.A. de C.V.
Segunda Avenida #977, Colonia Zimix, Santa Catarina,
Nuevo León 66358, Mexico
Phone +52 (81) 20 86 5510,
contacto@kontrolable.com, www.kontrolable.com

OVERVIEW BANDSAWS MÖSSNER REKORD
PRODUCT PORTFOLIO

Bandsaw type	Cutting speed m/min.	Standard tables		Max. Throat		Sizes Bandsaw mm	Motor power kW
		Size mm	Load max. kg	Height mm	Width mm		
SSF420 Shift transmission	12-1900	600 x 600	150	230	410	L 1215 W 750 H 1860	2,2
SSF520 Shift transmission	22-150 and 338-2280	740 x 785	250	520	510	L 1565 W 970 H 2600	5,5
Flange bearing	500-2000						
SSF630 Shift transmission	27-142 and 410-2200	740 x 785	250	460	605	L 1820 W 970 H 2560	5,5
Flange bearing	500-2000						
SSF630 reinforced design Shift transmission	30-180 and 342-2000	740 x 785	250	460	605	L 1820 W 970 H 2560	11
Flange bearing	500-2000						
SSF801 Shift transmission	26-180 and 290-2000	960 x 1000	750	670	785	L 2240 W 1080 H 3000	11
Flange bearing	500-2000						
SSF1600 Shift transmission	22-150 and 338-2280	740 x 785	250	400	1600	L 3100 W 1060 H 2320	5,5
Flange bearing	500-2000						

STEEL AND METAL BANDSAW MACHINES

MÖSSNER REKORD SSF420

Technical details:

- Bandsaw machine column in stable grey cast construction
- Cutting speed infinitely variable by shift transmission, frequency converter and AC motor
- Sawblade tension indication
- Work table inclinable (to the right side approx. 30° and to the left side approx. 15°)
- Exchangeable aluminium wheels with vulcanised hard rubber coating
- Swivelling upper wheel
- Complete electrical execution according to the usual VDE regulations
- Position switch for safety of the protection doors
- Jaw guides for saw blades with one pair hard metal fitted guidance inserts for 10 mm wide and 0,9 mm thick (other dimensions available on request)
- 1 bi-metal saw blade
- Roller guidance for saw blades with one set guidance wheels for 10 mm width of saw blade
- 1 set of operating tools
- Machine according to the valid regulations and with CE-mark
- Colour: RAL 7035 light grey, doors RAL 5005 signal blue

Technical specifications:

Voltage: (other voltage against extra cost)	Volt/Hertz	400 / 50
Range of cutting speed:	m/min	12-1900
Wheel diameter:	mm	420
Table size:	mm	600 x 600
Max. payload table:	kg	150
Throat width:	mm	410
Throat height:	mm	230
Motor power:	kW	2.2
	Volt/Hertz	230 / 400 / 50
	1/min	1500
Dimensions L x W x H:	mm	1215 x 750 x 1860
Net weight:	approx. kg	680

STEEL AND METAL BANDSAW MACHINES

MÖSSNER REKORD SSF420

Product pictures / drawings

Picture shows special equipment

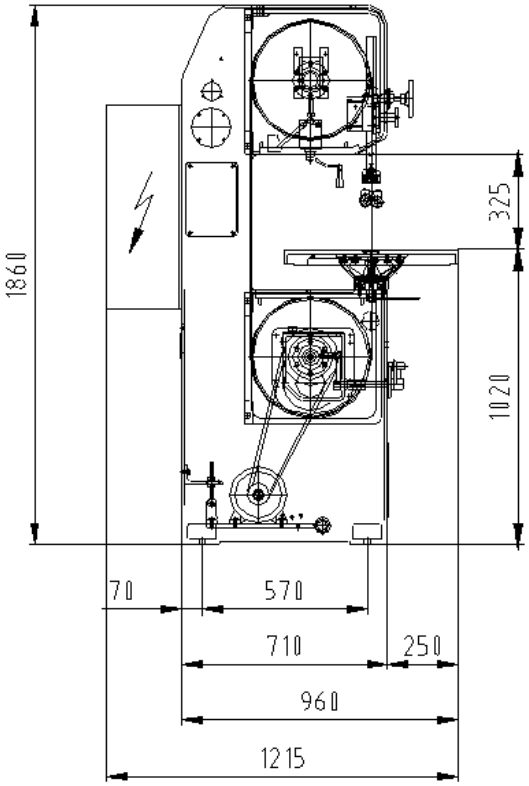

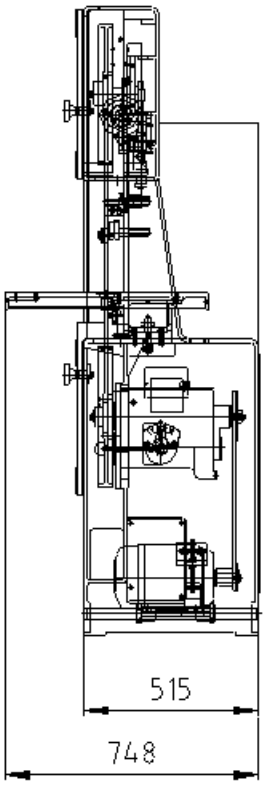

Top view

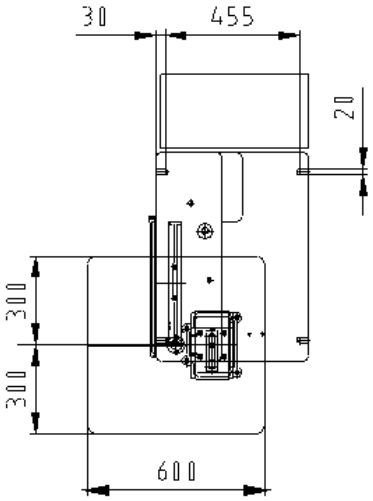

STEEL AND METAL BANDSAW MACHINES

MÖSSNER REKORD SSF520

Technical details:

- Bandsaw machine column in stable grey cast construction
- Cutting speed infinitely variable by shift transmission, frequency converter and AC motor ***or*** *with flange bearing and frequency converter*
- Mechanical sawblade tension device with hydraulic indication
- Work table inclinable (to the right side approx. 30° and to the left side approx. 15°)
- Exchangeable aluminium wheels with vulcanized hard rubber coating
- Swivelling upper wheel
- Complete electrical execution according to the usual VDE regulations
- Position switch for safety of the protection doors
- Jaw guides for saw blades with one pair hard metal fitted guide inserts for 13 mm width and 0,9 mm thickness of blade (other dimensions by request)
- Roller guidance for saw blades with one set of rollers 20 mm width of saw blade
- 1 bi-metal saw blade
- 1 set of operation tools
- Machine according to the valid regulations and with CE-mark
- Colour: RAL 7035 light grey, doors RAL 5005 signal blue

Technical specifications:

Voltage:	Volt/Hertz	400 / 50
(other voltage against extra cost)		
Range of cutting speed shift transmission:	m/min.	22-150 and 338-2280
Range of cutting speed flange bearing:	*m/min.*	*500 – 1900*
Wheel diameter:	mm	520
Table size:	mm	740 x 785
Max. payload table:	kg	250
Throat width:	mm	510
Throat height:	mm	520
Motor power:	kW	5.5
	Volt/Hertz	400/690/50
	1/min	1500
Dimensions L x W x H:	mm	1565 x 970 x 2600
Net weight:	approx. Kg	1100

STEEL AND METAL BANDSAW MACHINES

MÖSSNER REKORD SSF520

Product pictures / drawings

Picture shows special equipment

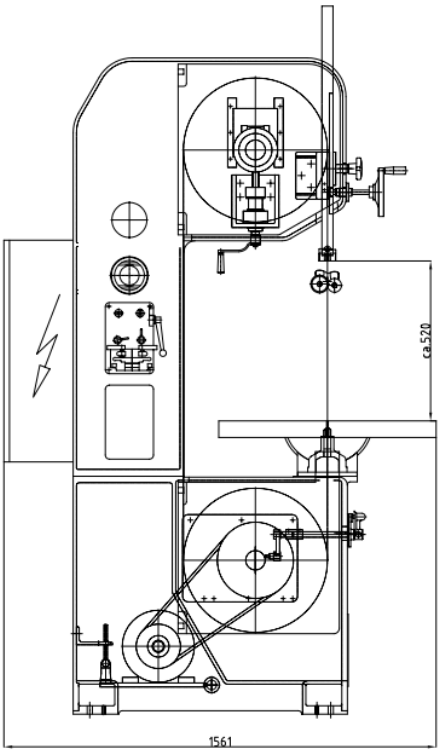

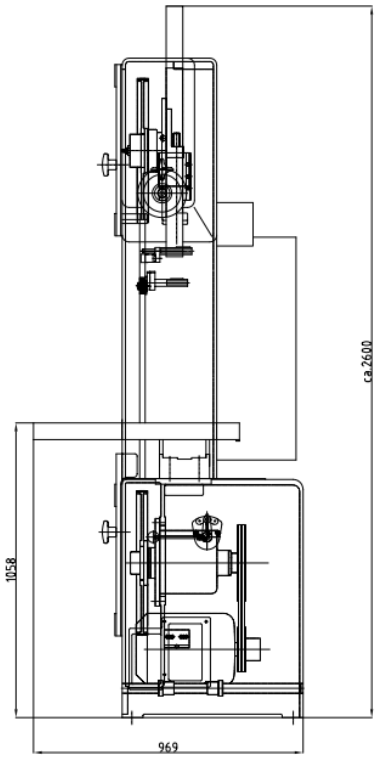

Top view

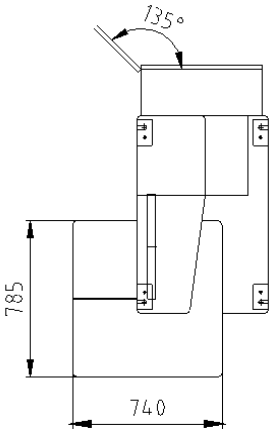

STEEL AND METAL BANDSAW MACHINES

MÖSSNER REKORD SSF630

Technical specifications:

- Bandsaw machine column in stable steel construction
- Cutting speed infinitely variable by shift transmission, frequency converter and AC motor ***or*** *with flange bearing and frequency converter*
- Mechanical sawblade tension device with hydraulic indication
- Work table inclinable (to the right side approx. 30° and to the left side approx. 15°)
- Exchangeable aluminium wheels with vulcanized hard rubber coating
- Swivelling upper wheel
- Complete electrical execution according to the usual VDE regulations
- Position switch for safety of the protection doors
- Jaw guides for saw blades with one pair hard metal fitted guide inserts for 13 mm width and 0.9 mm thickness of blade (other dimensions by request)
- Roller guidance for saw blades with one set rollers for 20 mm width of saw blade
- 1 bi-metal saw blade
- 1 set of operating tools
- Machine according to the valid regulations and with CE-mark
- Colour: RAL 7035 light grey, doors RAL 5005 signal blue

Technical specifications:

Voltage:	Volt/Hertz	400 / 50
(other voltage against extra cost)		
Range of cutting speed shift transmission:	m/min.	27-142 and 410-2200
Range of cutting speed flange bearing:	*m/min.*	*500-1900*
Wheel diameter:	mm	630
Table size:	mm	740 x 785
Max. payload table:	kg	250
Throat width:	mm	605
Throat height:	mm	460
Motor power:	kW	5.5
	Volt/Hertz	400/690 / 50
	1/min	1500
Dimensions L x W x H:	mm	1820 x 970 x 2560
Net weight:	approx. kg	1750

Optionally: Bandsaw in reinforced design

- Drive: 11 kW
- Max. sawblade width: 34mm
- Reinforced flange bearing and reinforced hydraulic driven slide for sawblade tension
- Range of cutting speed shift transmission: 30-180 m/min. und 342-2000 m/min., Range of cutting speed flange bearing: 500-1900 m/min.

STEEL AND METAL BANDSAW MACHINES

MÖSSNER REKORD SSF630

Product pictures / drawings

Picture shows special equipment

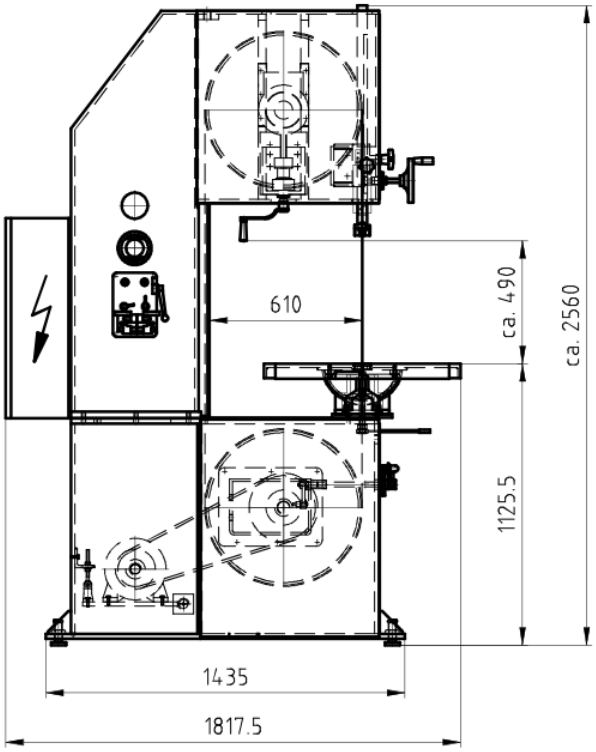

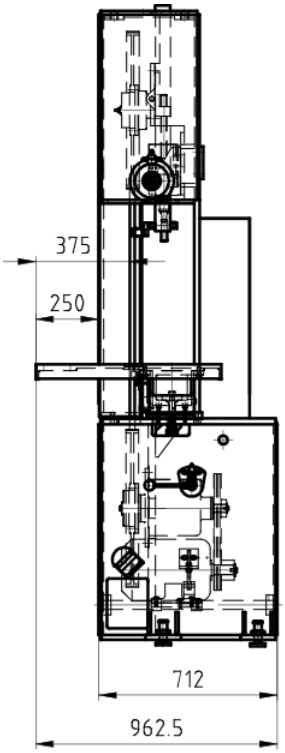

Top view

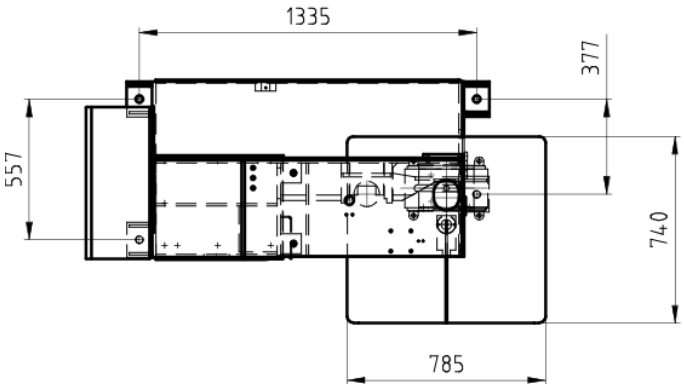

STEEL AND METAL BANDSAW MACHINES

MÖSSNER REKORD SSF801

Technical details:

- Bandsaw machine column in stable grey cast construction
- Cutting speed infinitely variable by shift transmission, frequency converter and AC motor
- Mechanical sawblade tension device with hydraulic indication
- Work table inclinable (to the right side approx. 30° and to the left side approx. 15°)
- Exchangeable aluminium wheels with vulcanized hard rubber coating
- Swivelling upper wheel
- Complete electrical execution according to the usual VDE regulations
- Position switch for safety of the protection doors
- Jaw guides for saw blades with one pair hard metal fitted guide inserts for 13 mm width and 0,9 mm thickness of blade (other dimensions by request)
- Special roller guidance with one set guidance rings for 27 mm wide saw blade
- Emergency push-button
- 1 bi-metal saw blade
- 1 set of operation tools
- Machine according to the valid regulations and with CE-mark
- Colour: RAL 7035 light grey, doors RAL 5005 signal blue

Technical specifications:

Voltage: (other voltage against extra cost)	Volt/Hertz	400 / 50
Range of cutting speed:	m/min.	26-180 and 290-2000
Wheel diameter:	mm	800
Table size:	mm	960 x 1000
Max. payload table:	kg	750
Throat width:	mm	785
Throat height:	mm	670
Motor power:	kW	11
	Volt/Hertz	400/690/50
	1/min	1500
Dimensions L x W x H:	mm	2240 x 1080 x 3000
Net weight:	approx. kg	2300

STEEL AND METAL BANDSAW MACHINES

MÖSSNER REKORD SSF801

Product pictures / drawings

Picture shows special equipment

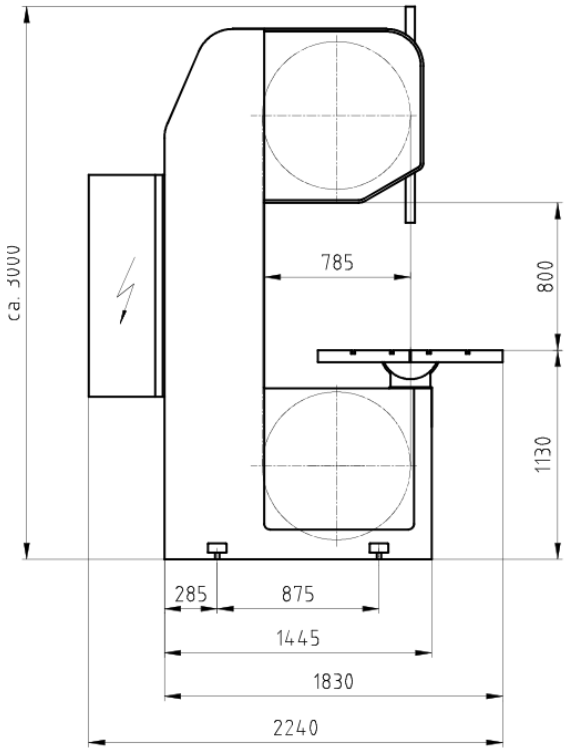

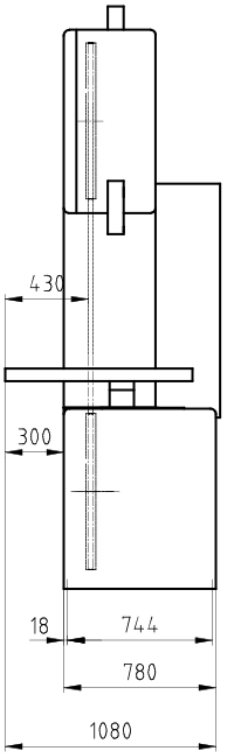

Top view

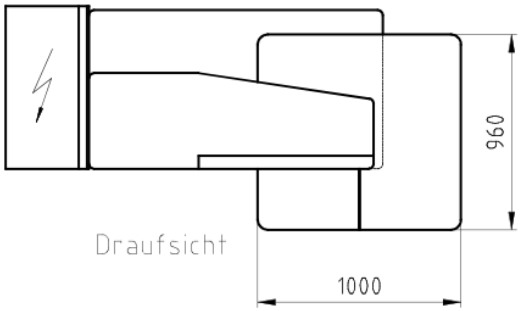

STEEL AND METAL BANDSAW MACHINES

MÖSSNER REKORD SSF1600

Technical details:

- Bandsaw machine column in stable steel construction
- Cutting speed infinitely variable by shift transmission, frequency converter and AC motor ***or*** *with flange bearing and frequency converter*
- Mechanical sawblade tension device with hydraulic indication
- Work table inclinable (to the right side approx. 30° and to the left side approx. 15°)
- Exchangeable aluminium wheels with vulcanized hard rubber coating
- Swivelling upper wheel
- Complete electrical execution according to the usual VDE regulations
- Position switch for safety of the protection doors
- Jaw guides for saw blades with one pair hard metal fitted guide inserts for 13 mm width and 0,9 mm thickness of blade (other dimensions by request)
- Roller guidance for saw blades with one set rollers for 20 mm width of saw blade
- 1 bi-metal saw blade
- 1 set of operating tools
- Machine according to the valid regulations and with CE-mark
- Swivelling control panel with two pivotal points at saw throat and operator's panel Height of bottom edge operator's panel 1400 mm, main switch remains in the control cabinet
- Colour: RAL 7035 light grey, doors RAL 5005 signal blue

Technical specifications:

Voltage:	Volt/Hertz	400 / 50
(other voltage against extra cost)		
Range of cutting speed shift transmission:	m/min.	22-150 and 338-2280
Range of cutting speed flange bearing:	*m/min.*	*500-1900*
Wheel diameter:	mm	520
Table size:	mm	740 x 785
Max. payload table:	kg	250
Throat width:	mm	1600
Throat height:	mm	400
Motor power:	kW	5.5
	Volt/Hertz	400/690/50
	1/min	1500
Dimensions L x W x H:	mm	3100 x 1060 x 2320
Net weight:	approx. kg	2050

STEEL AND METAL BANDSAW MACHINES

MÖSSNER REKORD SSF1600

Product pictures / drawings

Picture shows special equipment

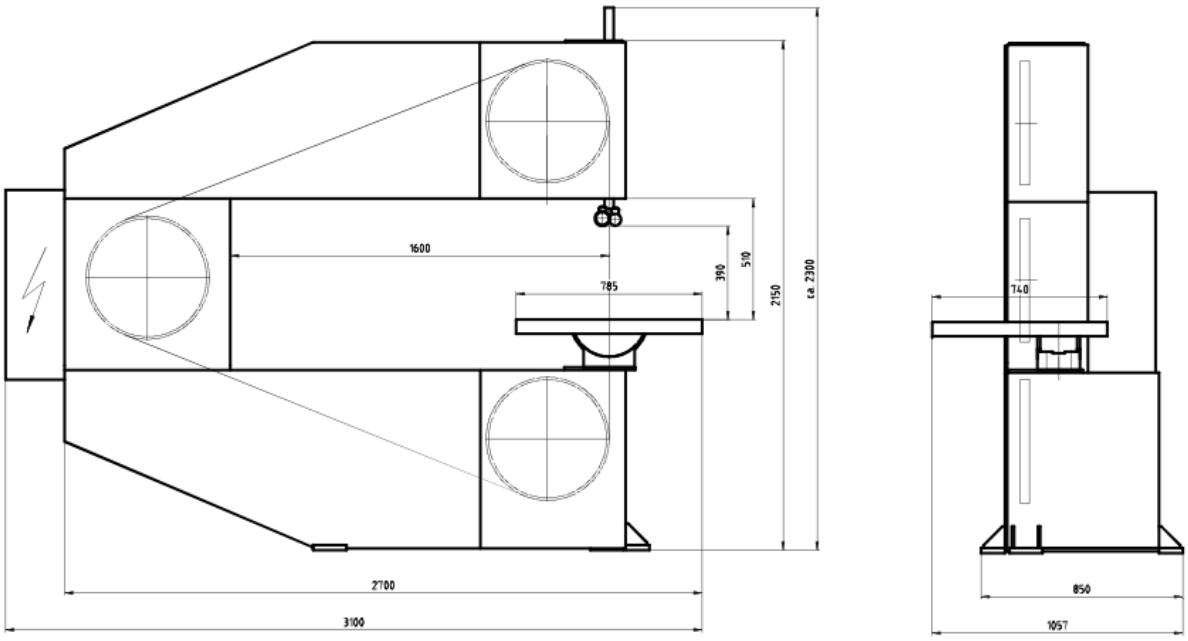

Top view

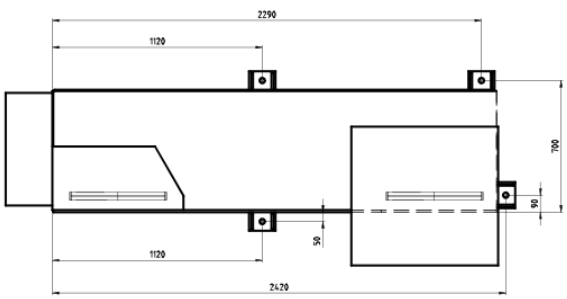

STEEL AND METAL BANDSAW MACHINES

SPECIAL EQUIPMENT

Butt welder

Butt welder EBS for sawblades, incl. shear and grinding motor.

<u>Available EBS types:</u>

⇨ For bandsaw type SSF420:
EBS16 for **max. 16 mm sawblade width**

⇨ For bandsaw types SSF520, SSF630, SSF1600:
EBS 25 for **max. 20 mm sawblade width**

SAWBLADE GUIDANCE

(dimensions depending on sawblade)

Sawblade guidance

Sawblade jaw guides with exchangeable carbide-tipped guide inserts, available in different sizes.

Guide rollers

Sawblade roller guidance for cutting speeds from 250 m/min., available in different sizes.

Special roller guidance for melting cuts

Special roller guidance for melting cuts with 1 pair guidance rings for 20 mm wide sawblades
(other sizes available on request).

STEEL AND METAL BANDSAW MACHINES

SPECIAL EQUIPMENT

SAFETY EQUIPMENT

Emergency push-button

Additional pedal switch for emergency stop.

Magnetic brake upper wheel

Automatic braking of the upper wheel with magnetic brake in case of emergency switch off of the machine.

HELPFUL EQUIPMENT

Straight cutting device

(not available with feed table)

The straight cutting device is attached to the working table by means of 4 pins.

The feed can be done manually.

Following cuts can be done:

- Cuts with angle up to 45° by means of the angle stopper (adjustable to mitre)
- Cuts with length up to 230 mm by means of the adjustable length stopper
- Depth of cut can be limited with another stopper

Technical data:

Size:	400 x 400 mm
Feed way:	240 mm

STEEL AND METAL BANDSAW MACHINES

SPECIAL EQUIPMENT

HELPFUL EQUIPMENT

Parallel ledger

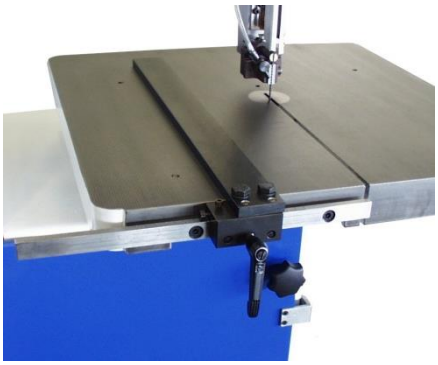

Parallel ledger consisting of:

- Scaled guide bar
- Guide cone with clamping
- Stopper lineal
- Adjusting range depending on machine type

Type SSF420	up to 290mm
Type SSF520/SSF630/SSF1600	up to 390mm
Type SSF801	up to 550mm

Workpiece holder

Workpiece holder for safe and exact guiding of the workpiece.

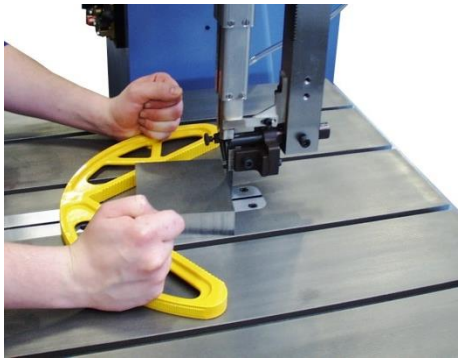

Cutting support device

The cutting support device is used to cut thin sheets with thickness up to approx. 6 mm.

Due to the small contact surface the sheet is prevented from vibrating and thus minimises the risk that teethes of sawblade break.

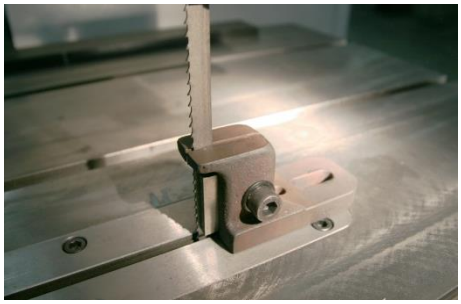

STEEL AND METAL BANDSAW MACHINES

SPECIAL EQUIPMENT

FEED TABLES STANDARD BANDSAW MACHINES

Feed tables

- Feed table with 4 T-grooves and wear parts
- Feed way depending on machine type
- Work table inclinable, to the right side approx. 8° and to the left side approx. 14°
- Instead of usual table execution

Available versions:

- Manual feed table with fixing (not available for type SSF801)
- Manual feed table with lead screw
- Electric feed table with servo motor and ball screw

In case an electric feed table is chosen for bandsaw type SSF420 the machine is additionally equipped with mechanic band tension device with hydraulic indication. Starting from size SSF520 the mechanic band tension is serially included.

Feed way / Table sizes:	Feed way approx.	Table size approx.
SSF420	230 mm	600x700 mm
SSF520, SSF630, SSF1600	350 mm	830x790 mm
SSF801	500 mm	1020x1000 mm

Tables in other sizes can be quoted on request.

Examples:

Manual feed table SSF420, with lead screw

Electric feed table SSF420

SPECIAL EQUIPMENT FEED TABLES

One-Axis-Positioning Control

- Feed length is entered via keyboard
- Actual value shown on digital display
- Electronic routing with incremental encoder
- Automatic switch off of feed movement when pre-set measurements are reached
- Max. 10 programs with 10 lines each

STEEL AND METAL BANDSAW MACHINES

SPECIAL EQUIPMENT

OTHERS

LED lamp

LED lamp for lighting of the working area.

Minimum spray device

Minimum spray device for lubrication of saw blade with thin oil

Consisting of:

- 1 spray head
- pressure container for 1 l content (lubricant not included)

Mechanic sawblade tension device

(serially included starting from size SSF520)

Mechanic sawblade tension device with hydraulic indication instead of standard device.
Incl. switch-off of drive in case of sawblade breakage.

Blowing off device

Blowing off of chips at the sawblade.
Pressure air provided by customer.

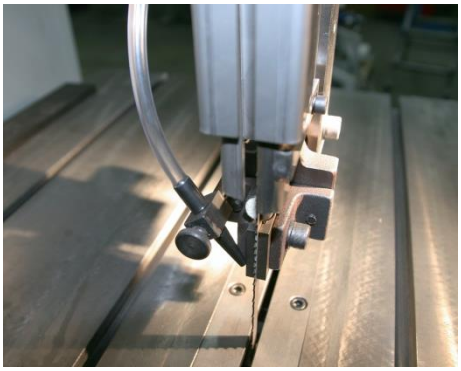

STEEL AND METAL BANDSAW MACHINES

SPECIAL EQUIPMENT

OTHERS

Alignment with laser

For exact positioning a laser beam projects a laser beam on the surface of the workpiece. This beam points out the cutting channel.

Used laser:
Helium-neon-laser with a prefixed line-optic, not dangerous for the eye (corneal reflex).

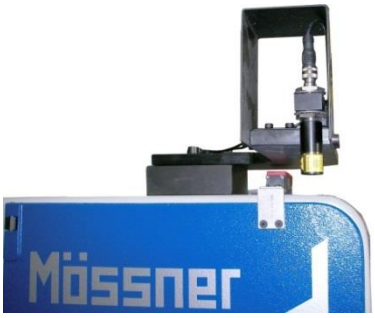

Connection piece for suction

Suction of chips at two points: lower sawblade guidance and lower wheel-box. Joined to 1 suction point for connection to suction system (by customer).

Design:
- Funnel with connection pieces under the working table, at the lower sawblade guidance
- Connection pieces in the lower wheel-box
- Housing of the drive wheel
- Diameter of the connecting pieces: 80 mm

Hydraulic sawblade tension

- Tension is activated by push button
- In case the saw blade tensioning drops / loosens the pre-set sawblade tension resets automatically
- When the machine is turned off, residual tension remains, to prevent the saw blade from sliding off the wheel

Swivelling control panel
(Starting from size SSF1600 the swivelling control panel is serially included)

Control panel with two pivotal points:
- Pivotal point 1 at the saw throat
- Pivotal point 2 at the operator's panel

The most important operating keys are integrated in the control panel. The main switch remains in the control cabinet.
Height of bottom edge operator's panel 1400 mm.

STEEL AND METAL BANDSAW MACHINES

PRICE LIST BANDSAW MACHINES

Valid from July 1, 2018 to June 30, 2019

Bandsaw Type	Price EUR without butt welder, shear and grinding motor	Price EUR with butt welder, shear and grinding motor
SSF420	15.090,00	16.600,00
SSF520 shift transmission	23.430,00	24.980,00
SSF520 flange bearing	22.630,00	24.180,00
SSF630 shift transmission	28.400,00	29.950,00
SSF630 shift transmission reinforced design 11 kW	37.850,00	on request
SSF630 flange bearing	27.600,00	29.150,00
SSF630 flange bearing reinforced design 11 kW	34.900,00	on request
SSF801 shift transmission	48.900,00	on request
SSF801 flange bearing	45.950,00	on request
SSF1600 shift transmission	33.900,00	35.450,00
SSF1600 flange bearing	33.100,00	34.650,00

Max. sawblade width butt welder:

- ⇨ For type SSF420: EBS16 for **max. 16 mm sawblade width**
- ⇨ For types SSF520, SSF630, SSF1600: EBS 25 for **max. 20 mm sawblade width**

Packaging bandsaw machines

Bandsaw Type	Price EUR Packaging / crate	Price EUR Seaworthy packaging
SSF420	175,00	566,00
SSF520	299,00	906,00
SSF630	505,00	1.740,00
SSF801	587,00	2.018,00
SSF1600	700,00	on request

STEEL AND METAL BANDSAW MACHINES

PRICE LIST SPECIAL EQUIPMENT

Valid from July 1, 2018 to June 30, 2019

Sawblade guidance (dimensions depending on sawblade)	**Bandsaw type**	**Price EUR**
Carbide-tipped guide inserts, available in different sizes, price per pair	All types	89,00
Guide rollers, price per set (1 set = 2 pc. with back, 2 pc. without back)	SSF420	458,00
	SSF520, SSF630, SSF1600	597,00
Special roller guidance for melting cuts with 1 pair guidance rings for 20 mm wide sawblades (other sizes available on request).	SSF520, SSF630, SSF1600	1.627,00
Guidance rings, price per set (1 set = 2 pc. with back, 2 pc. without back)	SSF520, SSF630, SSF1600	402,00
	SSF801	402,00

Wheels	**Bandsaw type**	**Price EUR**
Exchangeable aluminium wheels with vulcanized hard rubber coating, price per piece	SSF420	348,00
	SSF520, SSF1600	402,00
	SSF630, SSF801	1.118,00
Credit for worn wheels, if still usable and returned free of charge (per piece).	SSF420	136,00
	SSF520, SSF1600	179,00
	SSF630, SSF801	783,00

Safety equipment	**Bandsaw type**	**Price EUR**
Emergency push-button (serially included in SSF801)	All types	206,00
Safety magneto brake for undriven wheel	SSF420, SSF520, SSF630	752,00
	SSF 801	1.730,00
	SSF1600	1.499,00

STEEL AND METAL BANDSAW MACHINES

PRICE LIST SPECIAL EQUIPMENT

Valid from July 1, 2018 to June 30, 2019

Helpful equipment	Bandsaw type	Price EUR
Straight cutting device (not available with feed table)	All types	968,00
Parallel ledger	All types, except SSF801	494,00
Parallel ledger, one-side bearing	SSF801	2.101,00
Workpiece holder	All types	106,00
Cutting support device (without guide insert)	All types	72,00

Feed tables with 4 T-grooves Instead of standard table	Bandsaw type	Price EUR
Manual feed table with fixing (not available for type SSF801)	SSF420 230mm feed way	2.673,00
	520, SSF 630, SSF1600 350mm feed way	3.796,00
Manual feed table with lead screw	SSF420 230mm feed way	3.785,00
	SSF520, SSF 630, SSF1600 350mm feed way	5.346,00
	SSF801 500mm feed way	11.639,0,
Electric feed table with servo motor and ball screw	SSF420 230mm feed way	8.049,00
	SSF520, SSF 630, SSF1600 350mm feed way	9.270,00
	SSF801 500mm feed way	15.182,00
Feed tables in other sizes		on request
One-Axis-Positioning Control	All types	3.363,00

STEEL AND METAL BANDSAW MACHINES

PRICE LIST SPECIAL EQUIPMENT

Valid from July 1, 2018 to June 30, 2019

Other equipment	Bandsaw type	Prices EUR
LED lamp	All types	265,00
Minimum spray device (lubricant not included)	All types	2.106,00
Special grease lubricant price per litre in 10l package (graduated prices available on request)	All types	26,00
Mechanic sawblade tension device with hydraulic indication instead of standard device. Incl. switch-off of drive in case of sawblade breakage.	SSF420 (serially included starting from size SSF520)	644,00
Welding unit with electronic glow current regulation (for voltage until 400 Volt, 50 Hertz)	All types, except SSF801	402,00 additional price
Blowing off device	All types	185,00
Alignment with laser)	All types	839,00
Swivelling control panel	SSF520, SSF630, SSF801, SSF1600	1.825,00
Hydraulic sawblade tension	SSF520, SSF630, SSF801	5.263,00
Connection piece for suction	SSF420, SSF520, SSF630	1.401,00
Special colour (instead of standard machine colour)	SSF420	340,00
	SSF520	448,00
	SSF630, SSF801	567,00
	SSF1600	680,00
Enlarged throat of height by 250mm to 710mm	Only available for SSF630	2.112,00
Other voltage (additional price)	All types	344,00
Other voltage for butt welder (additional price)	All types	518,00

Sawblades	Bandsaw type	Prices EUR
Depending on material to be cut	All types	on request

Analysieren. Entwickeln. Machen.

Casting Technology

Sawing, Decoring, Deburring, Cooling, Finishing

Aluminium Technology

Sawing of Slabs, Blocks and Sheets

Bandsaw Machines

Standard Bandsaws and Individual Solutions

Nuclear Technology

Dismantlement of Nuclear Installations

August Mössner GmbH + Co. KG
Hohenstaufenstraße 3
73569 Eschach, Germany
Phone +49 (0)7175/99806–0
Fax +49 (0)7175/99806–35
www.moessner-kg.de
post@moessner-kg.de